Vehicle Type	Universal
Gearbox Type	Clutch PTO

Product Code

KRD.36.SKR.D

Revision No-Date

00 - 02.05.2018

Products Views

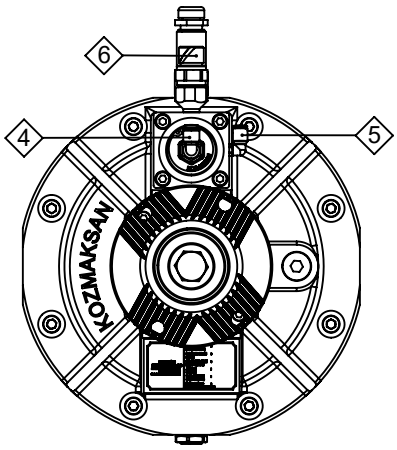

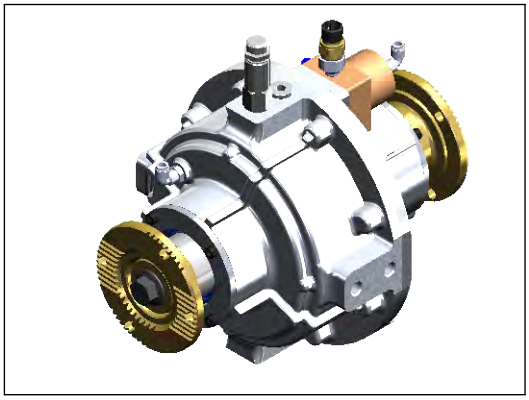

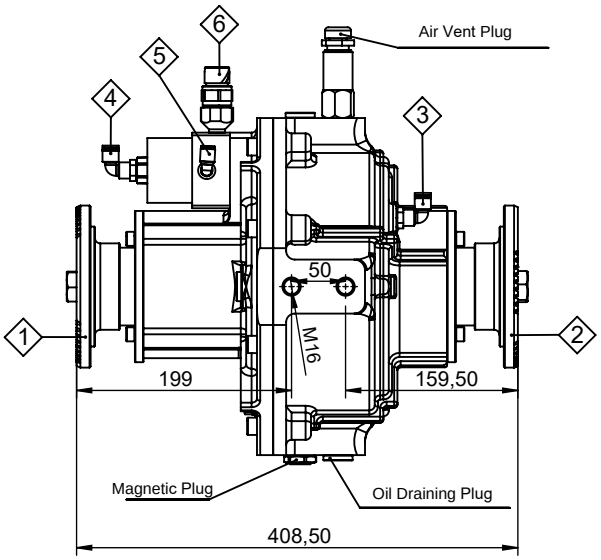

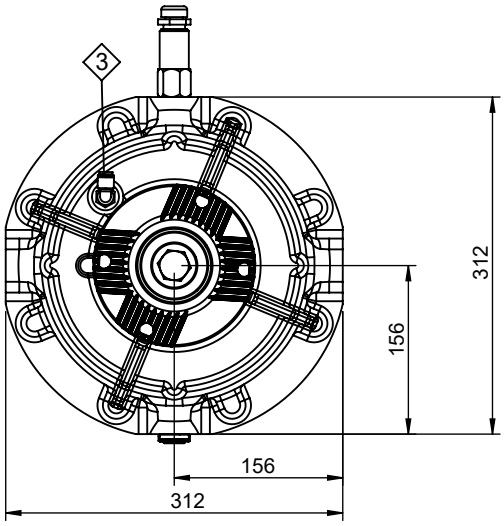

Component Details

1 : ISO 7647 - ISO 7646- ISO 8667 Standard Flange
2 : ISO 7647 - ISO 7646- ISO 8667 Standard Flange
3 : Air Inlet - First Engage Step
4 : Air Inlet - Second Engage Step
5 : Air Inlet - Disengage
6 : Engage/Disengage Sensor (Optional)

Technical Details

Outputs	Max. Power	Maximum Torque	Ratio	Mounting Side	Control Type
1 & 2	-	800 kgm	1/1	Split Shaft	Pneumatic
				Weight	**Sense of Rotation**
				42 kg	Same as Input

KOZANOĞLU KOZMAKSAN

Ofis
Tel. +90 312 **354 05 39**
Fax +90 312 **354 34 59**
7. Sokak No: 9
Ostim / ANKARA
e-mail: **info@kozmaksan**.com.tr

Fabrika
Tel. +90 312 **267 39 71**
Fax +90 312 **267 38 72**
AOS. 1. OSB. Erkunt Cad. No: 6
Sincan / ANKARA
Website: www.**kozmaksan**.net